Bore Diameter 50 – 75 mm

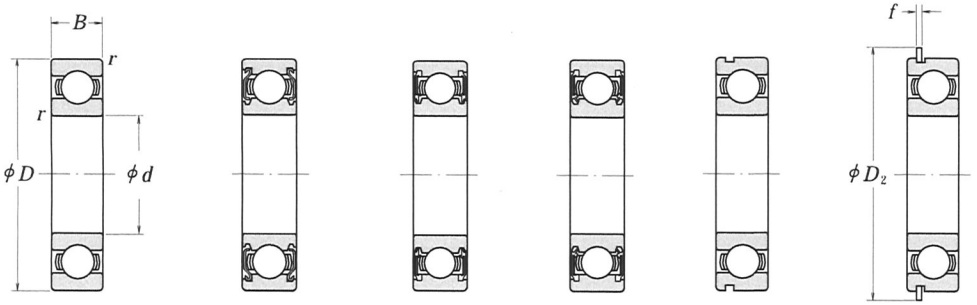

Open Type | Shielded Type ZZ | Non-Contact Sealed Type VV | Contact Sealed Type DD · DDU | With Snap Ring Groove N | With Snap Ring NR

Boundary Dimensions (mm)				Basic Load Ratings (N)		(kgf)		Factor	Limiting Speeds (min⁻¹) Grease		Oil	Bearing Numbers			
d	D	B	r min.	C_r	C_{0r}	C_r	C_{0r}	f_0	Open Z · ZZ V · VV	DU DDU	Open Z	Open	Shielded	Sealed	
50	65	7	0.3	6 400	6 200	655	635	17.2	9 500	5 300	11 000	**6810**	**ZZ**	**VV**	**DDU**
	72	12	0.6	14 500	11 700	1 480	1 200	16.1	9 000	5 300	11 000	**6910**	**ZZ**	**VV**	**DDU**
	80	10	0.6	15 400	12 400	1 570	1 260	16.1	8 500	—	10 000	**16010**	—	—	—
	80	16	1	21 800	16 600	2 220	1 700	15.6	8 500	4 800	10 000	**6010**	**ZZ**	**VV**	**DDU**
	90	20	1.1	35 000	23 200	3 600	2 370	14.4	7 100	4 800	8 500	**6210**	**ZZ**	**VV**	**DDU**
	110	27	2	62 000	38 500	6 300	3 900	13.2	6 000	4 300	7 500	**6310**	**ZZ**	**VV**	**DDU**
55	72	9	0.3	8 800	8 500	900	865	17.0	8 500	4 800	10 000	**6811**	**ZZ**	**VV**	**DDU**
	80	13	1	16 000	13 300	1 630	1 350	16.2	8 000	4 500	9 500	**6911**	**ZZ**	**VV**	**DDU**
	90	11	0.6	19 400	16 300	1 980	1 660	16.2	7 500	—	9 000	**16011**	—	—	—
	90	18	1.1	28 300	21 200	2 880	2 170	15.3	7 500	4 500	9 000	**6011**	**ZZ**	**VV**	**DDU**
	100	21	1.5	43 500	29 300	4 450	2 980	14.3	6 300	4 300	7 500	**6211**	**ZZ**	**VV**	**DDU**
	120	29	2	71 500	44 500	7 300	4 550	13.1	5 600	4 000	6 700	**6311**	**ZZ**	**VV**	**DDU**
60	78	10	0.3	11 500	10 900	1 170	1 120	16.9	8 000	4 500	9 500	**6812**	**ZZ**	**VV**	**DD**
	85	13	1	19 400	16 300	1 980	1 660	16.2	7 500	4 300	9 000	**6912**	**ZZ**	**VV**	**DDU**
	95	11	0.6	20 000	17 500	2 040	1 780	16.3	7 100	—	8 500	**16012**	—	—	—
	95	18	1.1	29 500	23 200	3 000	2 370	15.6	7 100	4 000	8 500	**6012**	**ZZ**	**VV**	**DDU**
	110	22	1.5	52 500	36 000	5 350	3 700	14.3	5 600	3 800	7 100	**6212**	**ZZ**	**VV**	**DDU**
	130	31	2.1	82 000	52 000	8 350	5 300	13.1	5 300	3 600	6 300	**6312**	**ZZ**	**VV**	**DDU**
65	85	10	0.6	11 900	12 100	1 220	1 230	17.0	7 500	4 000	8 500	**6813**	**ZZ**	**VV**	**DD**
	90	13	1	17 400	16 100	1 770	1 640	16.6	7 100	4 000	8 500	**6913**	**ZZ**	**VV**	**DDU**
	100	11	0.6	20 500	18 700	2 090	1 910	16.5	6 700	—	8 000	**16013**	—	—	—
	100	18	1.1	30 500	25 200	3 100	2 570	15.8	6 700	4 000	8 000	**6013**	**ZZ**	**VV**	**DDU**
	120	23	1.5	57 500	40 000	5 850	4 100	14.4	5 300	3 600	6 300	**6213**	**ZZ**	**VV**	**DDU**
	140	33	2.1	92 500	60 000	9 450	6 100	13.2	4 800	3 400	6 000	**6313**	**ZZ**	**VV**	**DDU**
70	90	10	0.6	12 100	12 700	1 230	1 300	17.2	6 700	3 800	8 000	**6814**	**ZZ**	**VV**	**DD**
	100	16	1	23 700	21 200	2 420	2 160	16.3	6 300	3 600	7 500	**6914**	**ZZ**	**VV**	**DDU**
	110	13	0.6	26 800	23 600	2 730	2 410	16.3	6 000	—	7 100	**16014**	—	—	—
	110	20	1.1	38 000	31 000	3 900	3 150	15.6	6 000	3 600	7 100	**6014**	**ZZ**	**VV**	**DDU**
	125	24	1.5	62 000	44 000	6 350	4 500	14.5	5 000	3 400	6 300	**6214**	**ZZ**	**VV**	**DDU**
	150	35	2.1	104 000	68 000	10 600	6 950	13.2	4 500	3 200	5 300	**6314**	**ZZ**	**VV**	**DDU**
75	95	10	0.6	12 500	13 900	1 280	1 410	17.3	6 300	3 600	7 500	**6815**	**ZZ**	**VV**	**DDU**
	105	16	1	24 400	22 600	2 480	2 300	16.5	6 000	3 400	7 100	**6915**	**ZZ**	**VV**	**DDU**
	115	13	0.6	27 600	25 300	2 820	2 580	16.4	5 600	—	6 700	**16015**	—	—	—
	115	20	1.1	39 500	33 500	4 050	3 400	15.8	5 600	3 400	6 700	**6015**	**ZZ**	**VV**	**DDU**
	130	25	1.5	66 000	49 500	6 750	5 050	14.7	4 800	3 200	5 600	**6215**	**ZZ**	**VV**	**DDU**
	160	37	2.1	113 000	77 000	11 600	7 850	13.2	4 300	2 800	5 000	**6315**	**ZZ**	**VV**	**DDU**

Notes (1) For tolerances for the snap ring grooves and snap ring dimensions, refer to Pages **A50** to **A53**.
(2) When heavy axial loads are applied, increase d_a and decrease D_a from the above values.

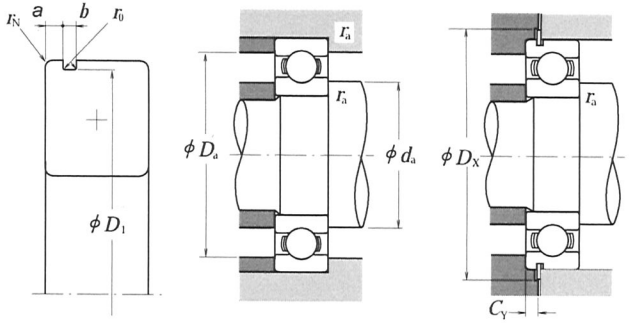

Dynamic Equivalent Load

$P = XF_r + YF_a$

$\frac{f_0 F_a}{C_{0r}}$	e	$\frac{F_a}{F_r} \leq e$		$\frac{F_a}{F_r} > e$	
		X	Y	X	Y
0.172	0.19	1	0	0.56	2.30
0.345	0.22	1	0	0.56	1.99
0.689	0.26	1	0	0.56	1.71
1.03	0.28	1	0	0.56	1.55
1.38	0.30	1	0	0.56	1.45
2.07	0.34	1	0	0.56	1.31
3.45	0.38	1	0	0.56	1.15
5.17	0.42	1	0	0.56	1.04
6.89	0.44	1	0	0.56	1.00

Static Equivalent Load

$\frac{F_a}{F_r} > 0.8,\ P_0 = 0.6F_r + 0.5F_a$

$\frac{F_a}{F_r} \leq 0.8,\ P_0 = F_r$

With Snap Ring Groove	With Snap Ring	Snap Ring Groove Dimensions (1) (mm) a max.	b min.	D_1 max.	r_0 max.	r_N min.	Snap Ring (1) Dimensions (mm) D_2 max.	f max.	Abutment and Fillet Dimensions (mm) d_a(2) min.	d_a(2) max.	D_a(2) max.	r_a max.	D_x min.	C_Y max.	Mass (kg) approx.
N	**NR**	1.3	0.95	63.7	0.25	0.3	67.8	0.85	52	52.5	63	0.3	68.5	1.8	0.050
N	**NR**	1.7	0.95	70.7	0.25	0.5	74.8	0.85	54	55	68	0.6	76	2.3	0.135
—	—	—	—	—	—	—	—	—	54	—	76	0.6	—	—	0.175
N	**NR**	2.49	1.9	76.81	0.6	0.5	86.6	1.7	55	58.5	75	1	88	3.8	0.261
N	**NR**	3.28	2.7	86.79	0.6	0.5	96.5	2.46	56.5	60	83.5	1	98	5.4	0.459
N	**NR**	3.28	2.7	106.81	0.6	0.5	116.6	2.46	59	68	101	2	118	5.4	1.06
N	**NR**	1.7	0.95	70.7	0.25	0.3	74.8	0.85	57	59	70	0.3	76	2.3	0.081
N	**NR**	2.1	1.3	77.9	0.4	0.5	84.4	1.12	60	61.5	75	1	86	2.9	0.189
—	—	—	—	—	—	—	—	—	59	—	86	0.6	—	—	0.257
N	**NR**	2.87	2.7	86.79	0.6	0.5	96.5	2.46	61.5	64	83.5	1	98	5	0.381
N	**NR**	3.28	2.7	96.8	0.6	0.5	106.5	2.46	63	66.5	92	1.5	108	5.4	0.619
N	**NR**	4.06	3.1	115.21	0.6	0.5	129.7	2.82	64	72.5	111	2	131.5	6.5	1.37
N	**NR**	1.7	1.3	76.2	0.4	0.3	82.7	1.12	62	64	76	0.3	84	2.5	0.103
N	**NR**	2.1	1.3	82.9	0.4	0.5	89.4	1.12	65	66	80	1	91	2.9	0.192
—	—	—	—	—	—	—	—	—	64	—	91	0.6	—	—	0.281
N	**NR**	2.87	2.7	91.82	0.6	0.5	101.6	2.46	66.5	69	88.5	1	103	5	0.412
N	**NR**	3.28	2.7	106.81	0.6	0.5	116.6	2.46	68	74.5	102	1.5	118	5.4	0.783
N	**NR**	4.06	3.1	125.22	0.6	0.5	139.7	2.82	71	79	119	2	141.5	6.5	1.72
N	**NR**	1.7	1.3	82.9	0.4	0.5	89.4	1.12	69	69	81	0.6	91	2.5	0.128
N	**NR**	2.1	1.3	87.9	0.4	0.5	94.4	1.12	70	71.5	85	1	96	2.9	0.218
—	—	—	—	—	—	—	—	—	69	—	96	0.6	—	—	0.30
N	**NR**	2.87	2.7	96.8	0.6	0.5	106.5	2.46	71.5	73	93.5	1	108	5	0.439
N	**NR**	4.06	3.1	115.21	0.6	0.5	129.7	2.82	73	80	112	1.5	131.5	6.5	1.0
N	**NR**	4.9	3.1	135.23	0.6	0.5	149.7	2.82	76	85.5	129	2	152	7.3	2.11
N	**NR**	1.7	1.3	87.9	0.4	0.5	94.4	1.12	74	74.5	86	0.6	96	2.5	0.134
N	**NR**	2.5	1.3	97.9	0.4	0.5	104.4	1.12	75	77.5	95	1	106	3.3	0.349
—	—	—	—	—	—	—	—	—	74	—	106	0.6	—	—	0.441
N	**NR**	2.87	2.7	106.81	0.6	0.5	116.6	2.46	76.5	80.5	103.5	1	118	5	0.608
N	**NR**	4.06	3.1	120.22	0.6	0.5	134.7	2.82	78	84	117	1.5	136.5	6.5	1.09
N	**NR**	4.9	3.1	145.24	0.6	0.5	159.7	2.82	81	92	139	2	162	7.3	2.57
N	**NR**	1.7	1.3	92.9	0.4	0.5	99.4	1.12	79	79.5	91	0.6	101	2.5	0.149
N	**NR**	2.5	1.3	102.6	0.4	0.5	110.7	1.12	80	82	100	1	112	3.3	0.364
—	—	—	—	—	—	—	—	—	79	—	111	0.6	—	—	0.463
N	**NR**	2.87	2.7	111.81	0.6	0.5	121.6	2.46	81.5	85.5	108.5	1	123	5	0.649
N	**NR**	4.06	3.1	125.22	0.6	0.5	139.7	2.82	83	90	122	1.5	141.5	6.5	1.19
N	**NR**	4.9	3.1	155.22	0.6	0.5	169.7	2.82	86	98.5	149	2	172	7.3	3.08

Remarks
1. Diameter Series 7 (extra thin section bearings) are also available, please contact NSK.
2. When using bearings with rotating outer rings, contact NSK if they are sealed, shielded, or have snap rings.
3. Please consult NSK about the snap ring groove dimensions of sealed and shielded bearings when the diameter of dimension series 18 and 19 is 50 mm or more.