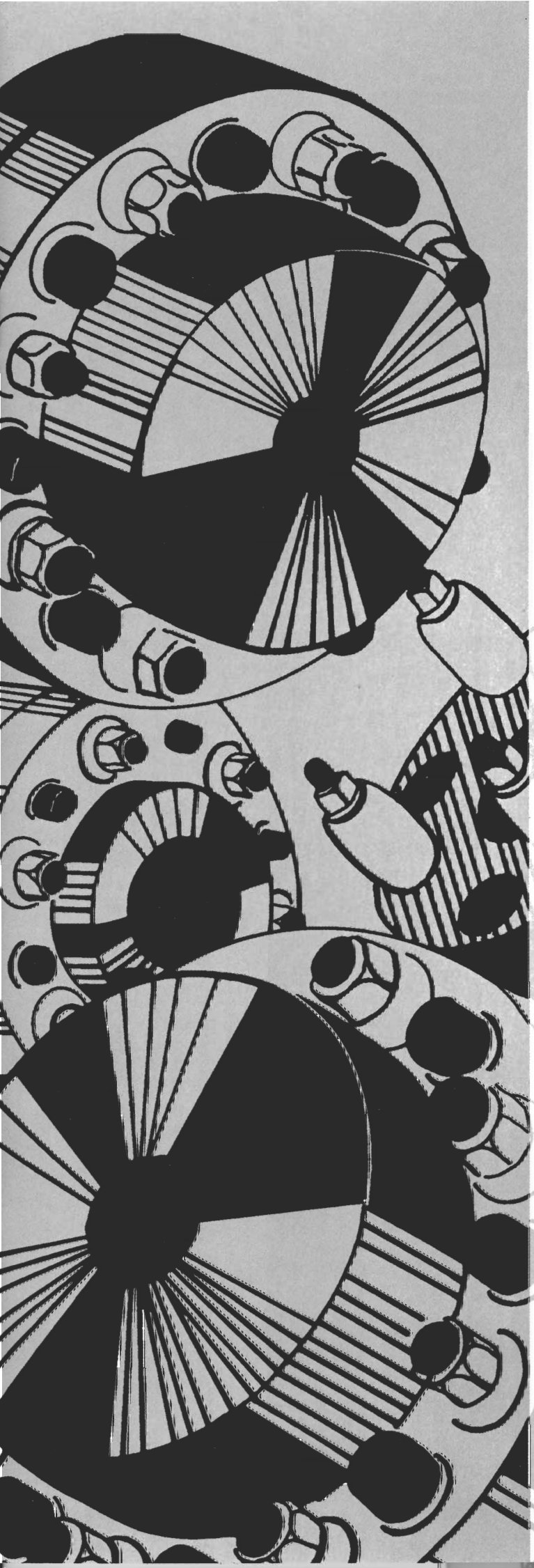

LEYDEN POWER TRANSMISSION COUPLINGS

Flexible Couplings
Registered in compliance with
Atex Directive 94/9/EC

Engineered for Excellence

INDEX

Page No.	Drg. No.	Description
1	10019A4	Introduction & Selection Details
2	10014A4	Dimension Table Standard Stock Resilient Couplings LXL P.B. Type
3	10015A4	Dimension Table Standard Non Stock Steel Resilient Couplings LXL P.B. Type
4	10029A4	Dimension Table Standard Non Stock C.I. Resilient Couplings LXL P.B. Type
5	10016A4	Sheet 1 Power Ratings for Standard Stock Resilient Couplings LXL P.B. Type
6	10016A4	Sheet 2 Power Ratings for Standard Stock Resilient Couplings LXL P.B. Type
7	10016A4	Sheet 3 Power Ratings for Standard Non Stock Resilient Couplings LXL P.B. Type
8	10017A4	Installation & Maintenance Instructions LXL P.B. Type
9	10021A4	Tightening Torques LXL P.B. & LXL T.B. Types
10	10022A4	Dimension Table of Standard Stock Brakedrum Couplings LXL B.M.P.B. Type
11	10023A4	Non Stock Brakedrum/Disc Couplings & Adaptations LXL P.B. Type
12	10030A4	Selection details for Brakedrum/Disc Couplings LXL P.B. Type
13	10024A4	Dimension Table of Standard Stock Rigid Couplings LRL P.B. Type
14	10026A4	Dimension Table of Standard Stock Resilient Couplings LXL T.B. Type
15	10027A4	Power Ratings for Standard Stock Resilient Couplings LXL T.B. Type
16	10028A4	Standard Metric & Imperial Bores for Taper Bushes
17	10031A4	Installation & Release Instructions for Taper Bushes
18	10032A4	Selection Examples

ATEX COUPLING SELECTION

It is recommended that the maximum number of pins and buffers is used for Atex applications to ensure a high service factor is achieved.

Introduction & Selection Details for LEYFLEX Resilient and Rigid Couplings

Resilient Couplings

Accepts the following misalignments:— Angular, Parallel & Axial

Torsionally Resilient — Non Lubricating — Simple Assembly

Maintenance Free — Special Adaptations — Identical Steel Flanges

Capable of working between temperatures of − 50° C to + 105° C

Elements flame resistant anti-static N.C.B. Acceptance No. A2032

Introduction

The elements have the ability to absorb shock loads and dampen vibrations and therefore the couplings are suitable for applications where shock, vibrations or reversing duties are encountered.

Selection Formula

Where speeds are not within those shown on Power Rating Charts the Coupling Capacity =

$$\frac{\text{Transmitted kw} \times 100 \times \text{Duty Factor}}{\text{Speed of Coupling in rpm}} \text{ at 100 rpm}$$

Select coupling size by reading down the 100 rpm column taking into account the bores required. Where reversals are encountered also incorporate a factor of 1.25 to 1. Service factors comprise of a prime mover factor and a duty factor.

PRIME MOVER FACTOR

MOTOR or TURBINE	STEAM ENGINE WATER TURBINE	GAS or OIL ENGINE 1 or 3 CYL.	GAS or OIL ENGINE 2 or 4 CYL.
1	1.25	2.0	1.5

DUTY FACTORS

	DUTY FAC.
CRANES AND HOISTS	
Main Hoist	2.5
Skip Hoist	2.5
Slope	2.0
Bridge, Travel or Trolley	2.0
DYNAMOMETER	1.0
ELEVATORS	
Bucket, Centrifugal Discharge	1.25
Freight or Passenger	2.0
Gravity Discharge	1.25
ESCALATORS	1.0
EXCITER, GENERATOR	1.0
EXTRUDER, PLASTIC FANS	
Centrifugal	.75
Cooling Tower	2.0
Forced Draught—Across the Line start	1.5
Forced Draught Motor Driven through fluid or electric slip clutch	1.0
Gas Recirculating	1.5
Induced Draught with damper control or blade cleaner	1.25
Induced Draught without controls	2.0
Mine Ventilation—Surface	2.0
Mine Ventilation—Underground	2.5

	DUTY FAC.
MIXERS (see Agitators)	
Concrete	1.75
Muller	1.5
PRESS, PRINTING	1.5
PUG MILL	1.75
PULVERIZERS	
Hammermill	1.75
Hog	1.75
Roller	1.5
PUMPS	
Centrifugal	.75
Descaling, with accumulators	1.25
Gear, Rotary or Vane	1.25
Reciprocating	
1 cyl. single or double act.	2.0
2 cyl., single acting	2.0
2 cyl., double acting	1.75
3 or more cylinders	1.5
SCREENS	
Air Washing	1.0
Grizzly	2.0
Rotary Coal or Sand	1.5
Vibrating	2.5
Water	1.0
WOODWORKING MACHINERY	1.0

	DUTY FAC.
AGITATORS	
Vertical and Horizontal Screw, Propeller, Paddle	1.0
BLOWERS	
Centrifugal	.75
Lobe or Vane	1.25
CLARIFIER OR CLASSIFIER	1.0
COMPRESSORS	
Centrifugal	.75
Lobe of Rotary	1.25
Reciprocating with Flywheel and Gear between Compressor and Prime Mover	
1 cylinder, single acting	3.0
1 cylinder, double acting	3.0
2 cylinders, single acting	3.0
2 cylinders, double acting	3.0
3 cylinders, single acting	3.0
3 cylinders, double acting	2.0
4 or more cylinders, single acting	1.75
4 or more cylinders, double acting	1.75
CONVEYORS	
Apron, Assembly, Belt, Chain, Flight, Screw	1.0
Bucket	1.25
Live Roll, Shaker and Reciprocating	3.0

	DUTY FAC.
FEEDERS	
Apron, Belt, Disc, Screw	1.0
Reciprocating	2.5
GENERATORS	
Even Load	.75
Hoist or Railway Service	1.5
Welder Load	2.0
HAMMERMILL	1.75
LAUNDRY WASHER OR TUMBLER	2.0
LINE SHAFTS	
Any Processing Machinery	1.5
MACHINE TOOLS	
Auxiliary Drive	1.0
Bending Roll, Notching Press, Punch Press, Planer, Plate Reversing	1.75
Main Drive	1.5
Traverse Drive	1.0
METAL FORMING MACHINES	
Draw Bench Carriage and Main Drive	2.0
Extruder	2.0
Forming Machine and forming Mills	2.0
Slitters	1.0
Wire Drawing or Flattening	1.75
Wire Winder	1.5
Coilers and Uncoilers	1.5

REVERSING FACTOR 1.25

Dimension Table of Standard Stock LEYFLEX Resilient LXL P.B. Couplings

Steel Flanges
® Hytrel Elements

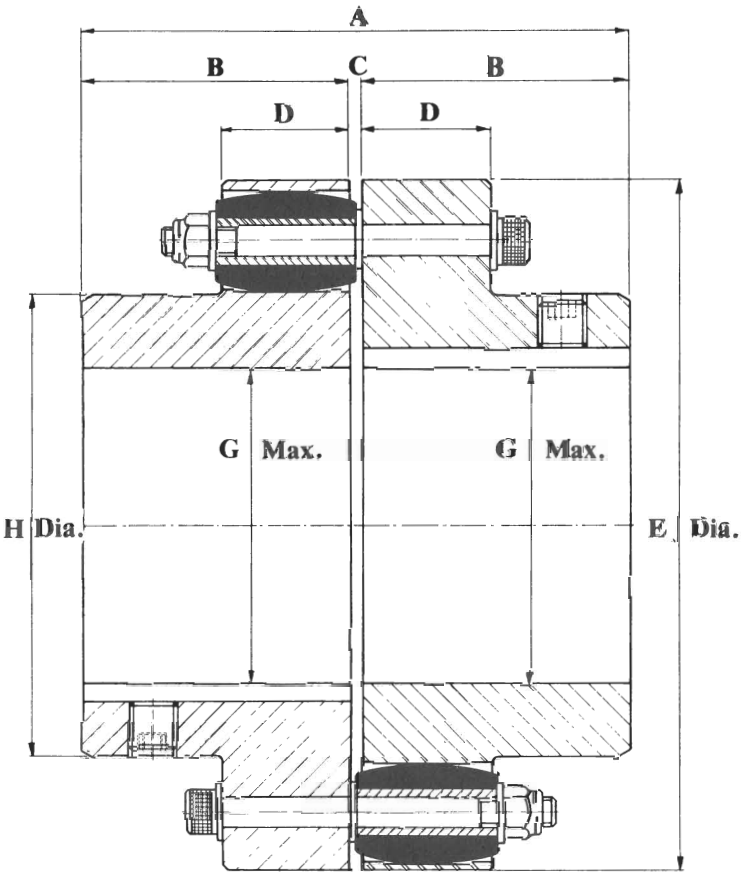

CPG SIZE	Min G	Max G with Taper Keyway	Max G with Parl Keyway	A	B	C	D	E	H	GD^2 KM^2	Weight Kgs
LXL25	12	25	28	53	25	3	15	80	40	0.0038	1.36
LXL32	16	32	38	63	30	3	15	90	53	0.0065	1.93
LXL42	18	42	48	85	40	5	25	115	67	0.0186	3.69
LXL55	20	55	60	105	50	5	25	135	83	0.0560	7.45
LXL65	30	65	73	125	60	5	25	150	98	0.0937	10.64
LXL80	35	80	90	155	75	5	30	185	123	0.269	20.34
LXL90	45	90	100	165	80	5	40	210	138	0.552	30.26
LXL100	50	100	110	185	90	5	50	235	153	0.895	40.53
LXL120	60	120	130	225	110	5	50	260	178	1.727	63.35
LXL148	70	148	155	256	125	6	65	330	215	5.334	116.82
LXL160	75	160	170	276	135	6	65	350	235	6.920	138.03

All GD^2 and weight values are with solid flanges.

® Dupont Registered Trade Name

Dimension Table of Standard Non Stock LEYFLEX Resilient LXL P.B. Couplings

Steel Flanges
(R) Hytrel Elements

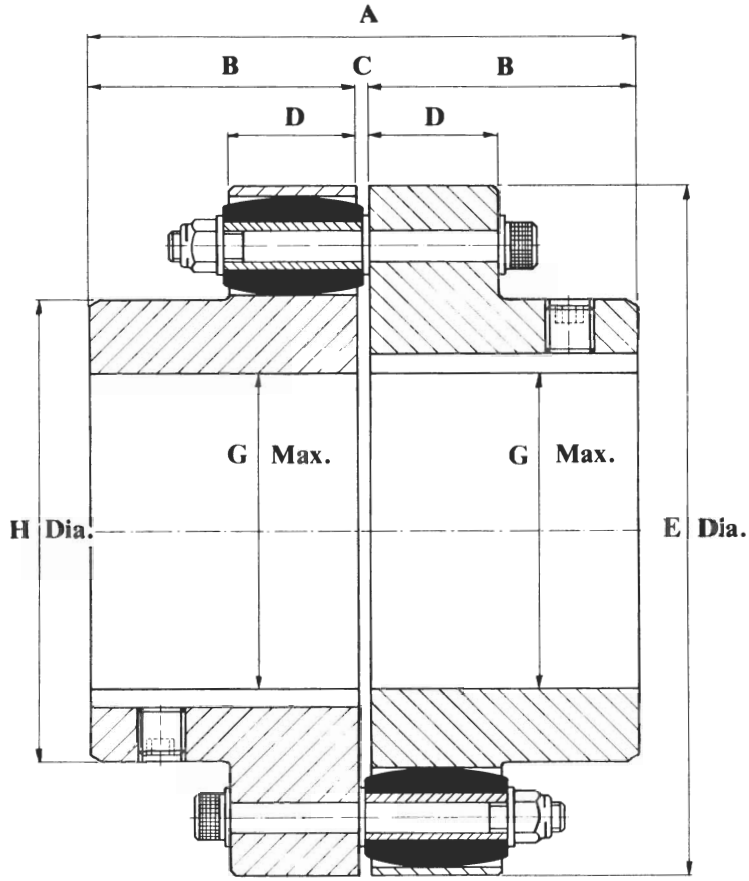

CPG SIZE	Min G	Max G with Taper Keyway	Max G with Parl Keyway	A	B	C	D	E	H	GD^2 KM^2	Weight Kgs
LXL170	75	190	200	326	160	6	70	430	280	17.88	243
LXL190	85	210	220	386	190	6	80	480	310	31.97	353
LXL210	95	235	245	406	200	6	80	540	345	51.64	458
LXL240	110	270	280	510	250	10	100	610	395	106.25	737
LXL270	120	310	320	570	280	10	105	665	450	168.40	996
LXL300	135	335	350	630	310	10	105	715	490	238.68	1252
LXL340	150	385	400	710	350	10	105	845	560	471.60	1846
			Larger sizes available upon request								

All GD^2 and weight values are with solid flanges

(R) Dupont Registered Trade Name

Dimension Table of Standard Non-Stock LEYFLEX Resilient LXL P.B. Couplings

Cast Iron Flanges
® Hytrel Elements

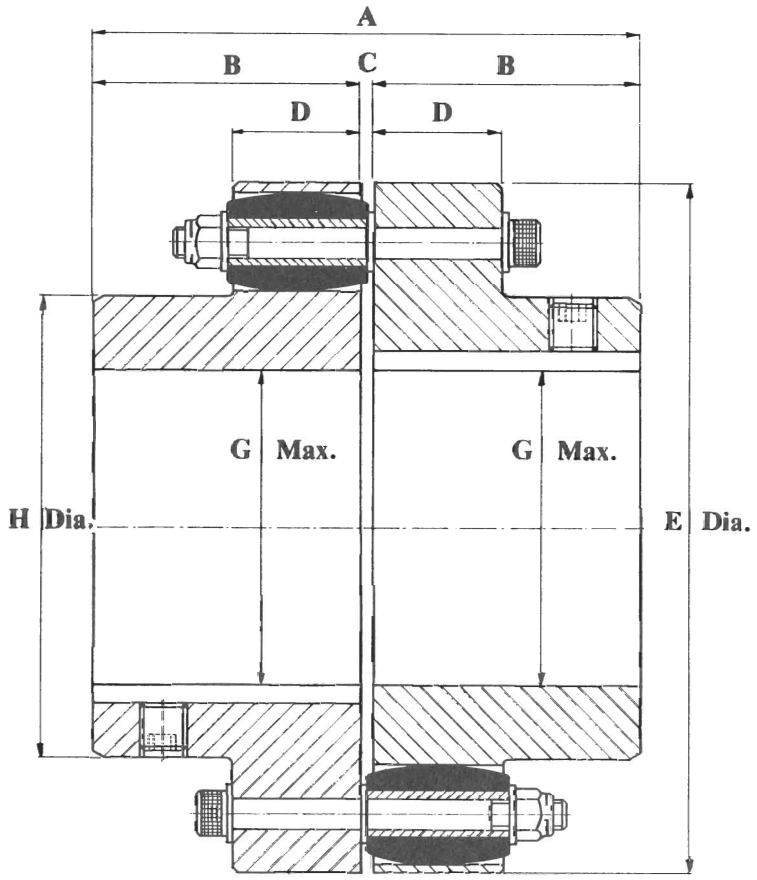

CPG SIZE	Min G	Max G with Taper Keyway	Max G with Parl Keyway	A	B	C	D	E	H	GD^2 KM^2	Weight Kgs
LXL170	75	170	180	326	160	6	70	430	280	16.600	225.60
LXL190	85	190	200	386	190	6	80	480	310	29.688	327.48
LXL210	95	210	230	406	200	6	80	540	345	47.960	424.59
LXL240	110	240	265	510	250	10	100	610	395	98.650	683.85
LXL270	120	270	300	570	280	10	105	665	450	156.460	924.87
LXL300	135	300	325	630	310	10	105	715	490	221.620	1162.34
LXL340	150	340	370	710	350	10	105	845	560	437.920	1714.00
			Larger sizes available upon request								

All GD^2 and weight values are with solid flanges.

® Dupont Registered Trade Name

TYPE LXL P.B. STOCK

SHEET 1 of 3

Coupg. Size	No. of Pins	Max. Speed	K.W. Ratings at R.P.M.										
			100	250	500	750	1000	1250	1500	1750	2000	2500	3000
LXL 25	2	11000 R.P.M.	0.50	1.25	2.50	3.75	5.00	6.25	7.50	8.75	10.00	12.50	15.00
	4		1.00	2.50	5.00	7.50	10.00	12.50	15.00	17.50	20.00	25.00	30.00
	6		1.50	3.75	7.50	11.25	15.00	18.75	22.50	26.25	30.00	37.50	45.00
	8		2.00	5.00	10.00	15.00	20.00	25.00	30.00	35.00	40.00	50.00	60.00
LXL 32	3	9700 R.P.M.	0.85	2.12	4.25	6.37	8.50	10.62	12.75	14.87	17.00	21.25	25.50
	6		1.70	4.25	8.50	12.75	17.00	21.25	25.50	29.75	34.00	42.50	51.00
	9		2.55	6.37	12.75	19.12	25.50	31.87	38.25	44.62	51.00	63.75	76.50
	12		3.40	8.50	17.00	25.50	34.00	42.50	51.00	59.50	68.00	85.00	102.00
LXL 42	3	7600 R.P.M.	2.19	5.47	10.95	16.42	21.90	27.37	32.85	38.32	43.80	54.75	65.70
	6		4.38	10.95	21.90	32.85	43.80	54.75	65.70	76.65	87.60	109.50	131.40
	9		6.57	16.42	32.85	49.27	65.70	82.12	98.55	115.00	131.40	164.25	197.10
	12		8.76	21.90	43.80	65.70	87.60	109.50	131.40	153.30	175.20	219.00	262.80
LXL 55	3	6500 R.P.M.	2.56	6.40	12.80	19.20	25.60	32.00	38.40	44.80	51.20	64.00	76.80
	6		5.12	12.80	25.60	38.40	51.20	64.00	76.80	89.60	102.40	128.00	153.60
	9		7.68	19.20	38.40	57.60	76.80	96.00	115.20	134.40	153.60	192.00	230.40
	12		10.24	25.60	51.20	76.80	102.40	128.00	153.60	179.20	204.80	256.00	307.20
LXL 65	4	5800 R.P.M.	3.87	9.67	19.35	29.00	38.70	48.37	58.05	67.72	77.40	96.75	116.10
	8		7.75	19.34	38.70	58.00	77.40	96.74	116.10	135.45	154.80	193.50	232.20
	12		11.62	29.05	58.10	87.15	116.20	145.25	174.30	203.35	232.40	290.50	348.60
	16		15.50	38.75	77.50	116.20	155.00	193.75	232.50	271.25	310.00	387.50	465.00
LXL 80	4	4700 R.P.M.	7.79	19.47	38.95	58.42	77.90	97.37	116.85	136.32	155.80	194.75	233.70
	8		15.58	38.94	77.90	116.84	155.80	194.75	233.70	272.64	311.60	389.50	467.40
	12		23.37	58.42	116.85	175.27	233.70	292.12	350.55	408.97	467.40	584.25	701.10
	16		31.16	77.90	155.80	233.70	311.60	389.50	467.40	545.30	623.20	779.00	934.80

TYPE LXL P.B. STOCK

SHEET 2 of 3

Coupg. Size	No. of Pins	Max. Speed	K.W. Ratings at R.P.M.										
			100	250	500	750	1000	1250	1500	1750	2000	2500	3000
LXL 90	4	4100 R.P.M.	16.21	40.52	81.05	121.57	162.10	202.62	243.15	283.67	324.20	405.25	486.30
	8		32.42	81.04	162.10	243.15	324.20	405.24	486.30	567.34	648.40	810.50	972.60
	12		48.63	121.53	243.15	362.25	486.30	607.87	729.45	851.00	972.60	1215.75	1459.00
	16		64.84	162.10	324.20	486.30	648.40	810.50	972.60	1135.00	1297.00	1621.00	1945.00
LXL 100	4	3700 R.P.M.	22.50	56.25	112.50	168.75	225.00	281.25	337.50	393.75	450.00	562.50	675.00
	8		45.00	112.50	225.00	337.50	450.00	562.50	675.00	787.50	900.00	1125.00	1350.00
	12		67.50	168.75	337.50	506.25	675.00	843.75	1013.00	1181.00	1350.00	1688.00	2025.00
	16		90.00	225.00	450.00	675.00	900.00	1125.00	1350.00	1575.00	1800.00	2250.00	2700.00
LXL 120	4	3300 R.P.M.	31.50	78.75	157.50	236.25	315.00	393.75	472.50	551.25	630.00	787.50	945.00
	8		63.00	157.50	315.00	472.50	630.00	787.40	945.00	1103.00	1260.00	1575.00	1890.00
	12		94.50	236.25	472.50	708.75	945.00	1181.00	1418.00	1654.00	1890.00	2363.00	2835.00
	16		126.00	315.00	630.00	945.00	1260.00	1575.00	1890.00	2205.00	2520.00	3150.00	3780.00
LXL 148	4	2600 R.P.M.	61.00	152.50-	305.00	457.50	610.00	762.50	915.00	1068.00	1220.00	1525.00	
	8		122.00	305.00	610.00	915.00	1220.00	1525.00	1830.00	2136.00	2440.00	3050.00	
	12		183.00	457.50	915.00	1373.00	1830.00	2288.00	2745.00	3203.00	3660.00	4575.00	
	16		244.00	610.00	1220.00	1830.00	2440.00	3050.00	3660.00	4270.00	4880.00	6100.00	
LXL 160	4	2500 R.P.M.	65.50	163.75	327.50	491.25	655.00	818.75	982.50	1146.00	1310.00	1638.00	
	8		131.00	327.50	655.00	982.50	1310.00	1638.00	1965.00	2292.00	2620.00	3276.00	
	12		196.00	490.00	980.00	1470.00	1960.00	2450.00	2940.00	3430.00	3920.00	4900.00	
	16		262.00	655.00	1310.00	1965.00	2620.00	3275.00	3930.00	4585.00	5240.00	6550.00	

TYPE LXL P.B. NON STOCK SHEET 3 of 3

Coupg. Size	No. of Pins	Max Speed Steel Flanges	Max Speed Cast Iron Flanges	K.W. Ratings at R.P.M.										
				10	25	50	75	100	250	500	750	1000	1500	2000
LXL 170	4	1900 R.P.M.	1100 R.P.M.	9.75	24.37	48.75	73.12	97.50	243.70	487.50	731.20	975.00	1462.00	1950.00
	8			19.50	48.75	97.50	146.20	195.00	487.50	975.00	1462.00	1950.00	2925.00	3900.00
	12			29.25	73.12	146.20	219.30	292.50	731.20	1462.00	2194.00	2925.00	4387.00	5850.00
	16			39.00	97.50	195.00	292.50	390.00	975.00	1950.00	2925.00	3900.00	5850.00	7800.00
LXL 190	4	1800 R.P.M.	1000 R.P.M.	15.50	38.75	77.50	116.20	155.00	387.50	775.00	1162.00	1550.00	2325.00	3100.00
	8			31.00	77.50	155.00	232.50	310.00	775.00	1550.00	2325.00	3100.00	4650.00	6200.00
	12			46.50	116.20	232.50	348.70	465.00	1162.00	2325.00	3487.00	4650.00	6975.00	9300.00
	16			62.00	155.00	310.00	465.00	620.00	1550.00	3100.00	4650.00	6200.00	9300.00	12400.00
LXL 210	4	1600 R.P.M.	900 R.P.M.	18.00	45.00	90.00	135.00	180.00	450.00	900.00	1350.00	1800.00	2700.00	3600.00
	8			36.00	90.00	180.00	270.00	360.00	900.00	1800.00	2700.00	3600.00	5400.00	7200.00
	12			54.00	135.00	270.00	405.00	540.00	1350.00	2700.00	4050.00	5400.00	8100.00	10800.00
	16			72.00	180.00	360.00	540.00	720.00	1800.00	3600.00	5400.00	7200.00	10800.00	14400.00
LXL 240	4	1400 R.P.M.	790 R.P.M.	32.50	81.20	162.50	243.70	325.00	812.00	1625.00	2437.00	3250.00	4875.00	
	8			65.00	162.50	325.00	487.50	650.00	1625.00	3250.00	4875.00	6500.00	9750.00	
	12			97.50	243.70	487.50	731.00	975.00	2437.00	4875.00	7312.00	9750.00	14625.00	
	16			130.00	325.00	650.00	975.00	1300.00	3250.00	6500.00	9750.00	13000.00	19500.00	
LXL 270	4	1200 R.P.M.	700 R.P.M.	40.50	101.20	202.50	303.70	405.00	1012.00	2025.00	3037.00	4050.00	6075.00	
	8			81.00	202.50	405.00	607.50	810.00	2025.00	4050.00	6075.00	8100.00	12150.00	
	12			121.50	303.70	607.50	911.20	1215.00	3037.00	6075.00	9112.00	12150.00	18225.00	
	16			162.00	405.00	910.00	1215.00	1620.00	4050.00	8100.00	12150.00	16200.00	24300.00	
LXL 300	5	1000 R.P.M.	600 R.P.M.	55.40	138.50	277.00	415.50	554.00	1385.00	2770.00	4155.00	5540.00		
	10			110.90	277.00	554.00	831.00	1109.00	2770.00	5540.00	8310.00	11080.00		
	15			166.30	415.70	831.00	1247.00	1663.00	4157.00	8315.00	12472.00	16630.00		
	20			221.80	554.00	1109.00	1663.00	2218.00	5540.00	11080.00	16630.00	22160.00		
LXL 340	6	900 R.P.M.	500 R.P.M.	81.00	202.50	405.00	607.50	810.00	2025.00	4050.00	6075.00	8100.00		
	12			162.00	405.00	810.00	1215.00	1620.00	4050.00	8100.00	12150.00	16200.00		
	18			243.00	607.50	1215.00	1822.00	2430.00	6075.00	12150.00	18225.00	24300.00		
	24			324.00	810.00	1620.00	2430.00	3240.00	8100.00	16200.00	24300.00	32400.00		

Installation & Maintenance Instructions for LEYFLEX Resilient LXL P.B. Couplings

Installation Instructions

Ensure each flange is clean. Fit each flange to their respective shafts. "Line up" coupling flanges by checking dimension between flange faces at 90° intervals or by using a straight edge across the outside diameter of flanges at 90° intervals. The flanges should be aligned to within the following tolerances noting that where one misalignment is present then the others must be reduced proportionally. The better the coupling is aligned will result in the elements giving a longer life.

Parallel Misalignment

LXL25 LXL32	LXL42 LXL65	LXL80 LXL120	LXL148 LXL160	LXL170 LXL240	LXL270 LXL340
0.12	0.20	0.30	0.40	0.50	0.50

Angular Misalignment

All couplings plus or minus 0.375°

Axial Misalignment

All couplings plus or minus 50% of flange gap (dimension C)

Fit the coupling pin, liners & resilient elements ensuring that each pin assembly has three washers fitted, one under the cap screw head and one at either end of the element. The pins should be fitted with the self locking nut adjacent to the resilient element. Where half number or less number of pin assemblies are being used then all resilient elements to be fitted into one flange. When all pin assemblies are fitted, tighten the self locking nuts in pairs at 180° to each other. See Page 9 for tightening torques.

Maintenance

Periodically check flange alignment and resilient elements for wear.

General Notes

All **LEYFLEX** resilient couplings are capable of accepting a momentary overload of 3 times the torque being transmitted.

Tightening Torques for LEYFLEX Resilient and Rigid Couplings LXL P.B. & T.B. Types

Resilient & Rigid LXL P.B. Type Couplings

Coupg. Size	Screw Size	Tightening Torque		Coupg. Size	Screw Size	Tightening Torque	
		NM	LB FT			NM	LB FT
25	M5	5.08	3.75	148	M16	187.00	138.00
32	M5	5.08	3.75	160	M16	187.00	138.00
42	M6	9.20	6.80	170	M16	187.00	138.00
55	M6	9.20	6.80	190	M20	337.00	249.00
65	M6	9.20	6.80	210	M20	337.00	249.00
80	M10	41.00	30.00	240	M24	568.00	419.00
90	M10	41.00	30.00	270	M30	1144.00	835.00
100	M12	77.00	57.00	300	M30	1144.00	835.00
120	M12	77.00	57.00	340	M30	1144.00	835.00

Resilient T.B. Couplings

Coupg. Size	Screw Size	Tightening Torque		Bush Size	Screw Size	Tightening Torque	
		NM	LB FT			NM	LB FT
90TB	M5	5.08	3.75	1008	1/4″ BSW	5.60	4.13
120TB	M5	5.08	3.75	1215	3/8″ BSW	19.50	14.38
135TB	M6	9.20	6.80	1615	3/8″ BSW	19.50	14.38
150TB	M6	9.20	6.80	2017	7/16″ BSW	30.40	22.40
185TB	M10	41.00	30.00	2525	1/2″ BSW	46.60	34.36
225TB	M10	41.00	30.00	3030	5/8″ BSW	87.70	64.75
265TB	M12	77.00	57.00	3535	1/2″ BSW	110.00	81.00
300TB	M12	77.00	57.00	4040	5/8″ BSW	164.60	121.40

Dimension Table of Standard Stock LEYFLEX Resilient Brakedrum LXL P.B. Couplings

Steel Flanges
® Hytrel Elements

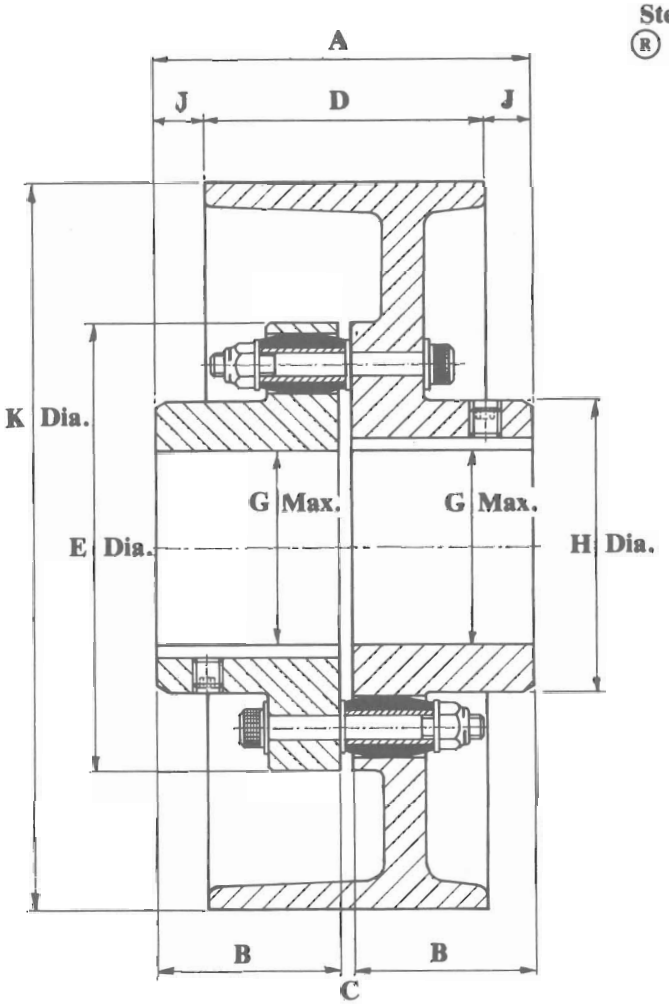

Brakedrums, Grade 17 cast iron, alternative S.G. iron or steel

Coupg SIZE	Min G	Max G with Taper Keyway	Max G with Par'l Keyway	Max Speed R.P.M.	A	B	C	D	E	H	J	K	GD^2 KM^2	Weight Kgs
LXL32BM	16	35	38	8500	63	30	3	55	90	53	4	100	0.0117	2.530
LXL32BM	16	35	38	8500	63	30	3	55	90	53	4	4″	0.0117	2.530
LXL42BM	18	45	48	5500	85	40	5	85	115	67	0	160	0.081	6.852
LXL42BM	18	45	48	5500	85	40	5	85	115	67	0	6″	0.081	6.852
LXL55BM	20	58	60	4200	105	50	5	108	135	83	1.5	200	0.308	14.830
LXL55BM	20	58	60	4200	105	50	5	108	135	83	1.5	8″	0.308	14.830
LXL65BM	30	70	73	3400	125	60	5	125	150	98	0	250	0.779	23.640
LXL65BM	30	70	73	3400	125	60	5	125	150	98	0	10″	0.779	23.640
LXL80BM	35	85	90	2800	155	75	5	140	185	123	7.5	315	1.648	38.310
LXL80BM	35	85	90	2800	155	75	5	140	185	123	7.5	12″	1.648	38.310

All GD^2 and weight values are with solid flanges.

® Dupont Registered Trade Name

Non Stock Standard Variations of LEYFLEX LXL P.B. Resilient Couplings

Brakedrum Couplings

See Drg. No. 10022A4 for Standard Stock Brakedrum Couplings

Coupg Size	Standard Brakedrum Dia × Face Width				Minimum Brakedrum Diameter
	Imperial			Metric	
LXL25BM	4″ × 2.13″			100 × 55	100
LXL32BM	5″ × 2¼″	6″ × 3¼″		160 × 83	100
LXL42BM	8″ × 4¼″	9″ × 4½″		200 × 108	150
LXL55BM	9″ × 4½″	10″ × 5 ″		250 × 127	160
LXL65BM	10″ × 5 ″	12″ × 5½″		315 × 140	200
LXL80BM	10″ × 5″	12″ × 5½″	13 × 5¾″	250 × 127	250
LXL90BM	12″ × 5½″	13″ × 5¾″	15″ × 6¼″	400 × 150	250
LXL100BM	13″ × 5¾″	15″ × 6¼″	16″ × 6¾″	400 × 185	300
LXL120BM	15″ × 6¼″	16″ × 6¾″	20″ × 9½″	500 × 240	300
LXL148BM	18″ × 8½″	20″ × 9½″	23″ × 11½″	500 × 240	400
LXL160BM	21″ × 9½″	23″ × 11½″	24″ × 10½″	630 × 290	400

Alternatives other than shown available on request.

Brakedisc Couplings

Coupg Size	Disc Dia.	Disc Width	Coupg Size	Disc Dia.	Disc Width	Coupg Size	Disc Dia.	Disc Width
LXL65BC	300	12.7	LXL120BC	400	12.7	LXL190BC	710	12.7
LXL80BC	300	12.7	LXL120BC	460	12.7	LXL210BC	710	12.7
LXL80BC	350	12.7	LXL148BC	515	12.7	LXL210BC	810	12.7
LXL90BC	350	12.7	LXL160BC	515	12.7	LXL240BC	810	12.7
LXL100BC	400	12.7	LXL160BC	610	12.7	LXL270BC	915	12.7
LXL100BC	460	12.7	LXL170BC	610	12.7	LXL300BC	915	12.7

Alternatives other than shown available on request.

Couplings suitable for the following adaptations

1) Carden Shaft Type
2) Spacer Type
3) Shearpin Type
4) Slipping Clutch Type
5) Disengaging Type
6) Flywheel Adaptations
7) Limited End Float Type
8) Mill Motor Type

All these applications, designed and manufactured to suit individual applications — send full details.

It is advisable to always fit maximum number of elements on HOIST applications.

Where half number or less elements are being used always fit these in the standard flange half and not the brakedrum/disc half.

BRAKEDRUM/DISC COUPLING SELECTION

On all LEYFLEX Brakedrum/Disc Resilient Couplings selection of coupling size should be taken into account using both motor and brake ratings not forgetting shaft sizes.

Method No. 1 **Motor Selection KW. — Motor KW × SF × DF**

Method No. 2 **Brake Selection KW — Brake KW × SF × 2**

$$\text{Motor KW at 100 R.P.M.} = \frac{\text{Motor KW} \times \text{SF} \times \text{DF} \times 100}{\text{R.P.M.}}$$

$$\text{Brake KW at 100 R.P.M.} = \frac{\text{Brake KW} \times \text{SF} \times 2 \times 100}{\text{R.P.M.}}$$

D.F. = Duty Factor See Drg. No. 10019A4 Page 1

S.F. = Number of Stops/Starts Factor per hour

Up to 50 Stops/Starts per hour S.F. = 1.20
Up to 100 Stops/Starts per hour S.F. = 1.40
Up to 150 Stops/Starts per hour S.F. = 1.60
Up to 200 Stops/Starts per hour S.F. = 1.80
Up to 250 Stops/Starts per hour S.F. = 2.00
Up to 300 Stops/Starts per hour S.F. = 2.30
Above 300 Stops/Starts per hour S.F. = 2.50

After determining motor and brake KW select on the highest duty.

See Page 10 for Dimension Table of Brakedrum Couplings.
See Page 11 for Brakedrum/Disc variations.

Dimension Table of Standard Stock LEYFLEX Rigid LRL P.B. Couplings

Steel Flanges

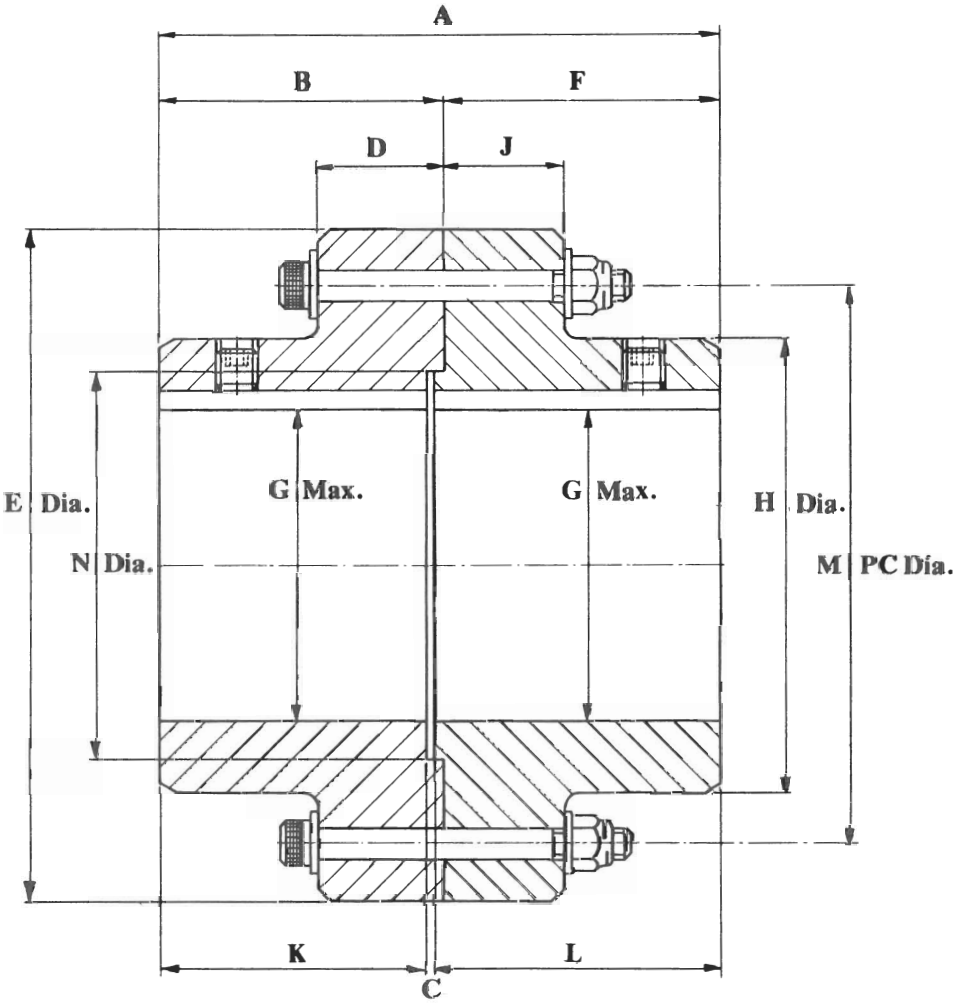

Larger sizes available on request.

GD^2 and weight values are with solid flanges

Higher torques than those listed can be accommodated refer to Leyden Transmissions Ltd. — if required.

Coupg Size	Min G	Max G with Taper Keyway	Max G with Par'l Keyway	Max KW at 100 RPM	Max Speed RPM	A	B	C	D	E	F	H	J	K	L	M	N	GD^2 KgM^2	Weight Kgs
LRL42	18	42	48	10.82	7600	77	39	1	24	115	38	67	23	36	40	90	55	0.0183	3.64
LRL55	20	55	60	12.62	6500	97	49	1	24	135	48	83	23	46	50	105	70	0.055	7.10
LRL65	30	65	73	19.24	5800	117	59	1	24	150	58	98	23	56	60	120	90	0.0930	10.20
LRL80	35	80	90	67.69	4700	145	74	1	29	185	71	123	26	69	75	150	100	0.261	19.94
LRL90	45	90	100	76.71	4100	155	79	2	39	210	76	138	36	73	80	170	120	0.549	29.83
LRL100	50	100	110	124.00	3700	175	89	2	49	235	86	153	46	83	90	190	130	0.887	39.14
LRL120	60	120	130	140.30	3300	215	109	2	49	260	106	178	46	103	110	215	150	1.698	60.25
LRL148	70	148	155	302.00	2600	245	124	2	64	330	121	215	61	118	125	270	170	5.160	112.80
LRL160	75	160	170	325.00	2500	265	134	2	64	350	131	235	61	128	135	290	190	6.430	132.07

Dimension Table of Standard Stock LEYFLEX Resilient LXL T.B. Couplings

® Hytrel Elements

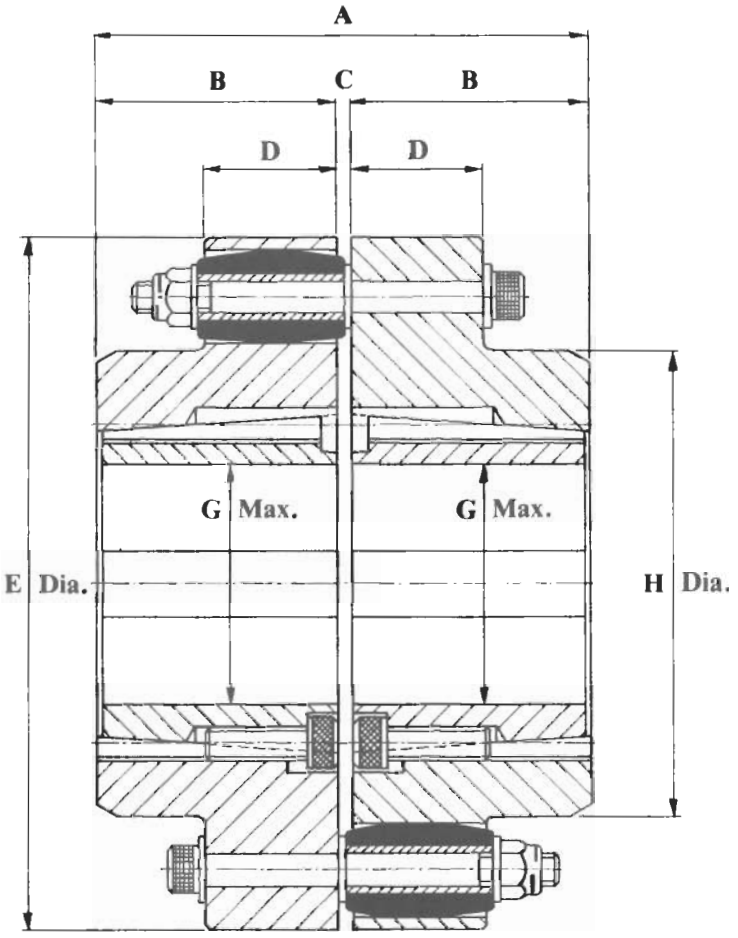

Coupg Size	Bush Size	Max G Metric	Max G Imperial	A	B	C	D	E	H	GD² KgM²	Weight Kgs
LXL90TB	1008	25	1″	51	24	3	15	90	50	0.00628	1.747
LXL120TB	1215	32	1¼″	85	40	5	25	120	68	0.02850	4.866
LXL135TB	1615	42	1⅝″	85	40	5	25	135	80	0.05350	6.672
LXL150TB	2017	50	2″	97	46	5	25	150	98	0.08680	9.100
LXL185TB	2525	60	2½″	135	65	5	30	185	120	0.26300	18.590
LXL225TB	3030	75	3″	161	78	5	40	225	145	0.67200	33.240
LXL265TB	3535	90	3½″	185	90	5	50	265	175	1.61300	55.900
LXL300TB	4040	100	4″	211	103	5	50	300	205	2.72100	78.280

ALL GD² and weight values are with solid flanges

® Dupont Registered Trade Name

TYPE LXL T.B. STOCK

Coupg. Size	No. of Pins	Bush Size	Max. Speed R.P.M.	K.W. Ratings at R.P.M.										
				100	250	500	750	1000	1250	1500	1750	2000	2500	3000
LXL 90TB	4	1008	9700	1.13	2.82	5.65	8.47	11.30	14.12	16.95	19.77	22.60	28.25	33.90
	8			2.26	5.65	11.30	16.95	22.60	28.25	33.90	39.54	45.20	56.50	67.80
LXL 120TB	4	1215	7600	2.92	7.30	14.60	21.90	29.20	36.50	43.80	51.10	58.40	73.00	87.60
	8			5.84	14.60	29.20	43.80	58.40	73.00	87.60	102.20	116.80	146.00	175.20
LXL 135TB	5	1615	6500	4.26	10.65	21.30	31.95	42.60	53.25	63.90	74.55	85.20	106.50	127.80
	10			8.53	21.30	42.60	63.90	85.20	106.50	127.80	149.10	170.40	213.00	255.60
LXL 150TB	6	2017	5800	5.81	14.52	29.00	43.57	58.10	72.62	87.15	101.67	116.20	145.20	174.30
	9			8.71	21.78	43.50	65.35	87.15	108.93	130.72	152.50	174.30	217.80	261.40
	12			11.62	29.00	58.00	87.15	116.20	145.20	174.30	203.30	232.40	290.50	348.60
LXL 185TB	6	2525	4700	11.86	29.65	59.30	88.95	118.60	148.20	177.90	207.50	237.20	296.50	356.00
	9			17.79	44.47	88.95	133.40	177.90	222.30	266.80	311.20	355.80	444.70	534.00
	12			23.73	59.30	118.60	177.90	237.20	296.50	356.00	415.00	474.60	593.00	712.00
LXL 225TB	6	3030	3900	25.50	63.75	127.50	191.20	255.00	318.70	382.50	446.20	510.00	637.00	765.00
	9			38.25	95.62	191.20	286.80	382.50	478.00	573.70	669.30	765.00	955.00	1147.00
	12			51.00	127.50	255.00	382.50	510.00	637.00	765.00	892.00	1020.00	1274.00	1530.00
LXL 265TB	6	3535	3300	47.25	118.10	236.20	354.30	472.00	590.00	709.00	827.00	945.00	1181.00	1418.00
	9			70.87	177.15	354.30	531.40	708.00	885.00	1063.00	1240.00	1417.00	1771.00	2127.00
	12			94.50	236.20	472.00	709.00	945.00	1181.00	1418.00	1654.00	1890.00	2362.00	2836.00
LXL 300TB	6	4040	3000	54.00	135.00	270.00	405.00	540.00	675.00	810.00	945.00	1080.00	1350.00	1620.00
	9			81.00	202.50	405.00	607.50	810.00	1012.00	1215.00	1417.00	1620.00	2025.00	2430.00
	12			108.00	270.00	540.00	810.00	1080.00	1350.00	1620.00	1890.00	2160.00	2700.00	3240.00

Standard Metric and Imperial Bores for Taper Bushes

Standard Metric Bores

Bores	Taper Bush Size									
	1008	1215	1615	2017	2525	3030	3535	4040	4545	5050
12										
14										
16										
18										
19										
20										
22										
24	*									
25	*									
28										
30										
32		*								
35										
38										
40										
42			*							
45										
48										
50				*						
55										
60										
65										
70										
75										
80										
85										
90							*			
95										
100								*		
105										
110									*	
115										
120										
125										*

Standard Imperial Bores

Bores	Taper Bush Size									
	1008	1215	1615	2017	2525	3030	3535	4040	4545	5050
3/8"										
7/16"										
1/2"										
9/16"										
5/8"										
11/16"										
3/4"										
13/16"										
7/8"										
15/16"	*									
1"	*									
1 1/16"										
1 1/8"										
1 3/16"										
1 1/4"										
1 5/16"										
1 3/8"										
1 7/16"										
1 1/2"										
1 5/8"			*							
1 3/4"										
1 7/8"										
2"										
2 1/8"										
2 1/4"										
2 3/8"					*					
2 1/2"					*					
2 5/8"										
2 3/4"										
2 7/8"										
3"										
3 1/8"										
3 1/4"										
3 3/8"							*			
3 1/2"							*			
3 3/4"								*		
4"								*		
4 1/4"									*	
4 1/2"									*	
4 3/4"										
5"										*

General Notes

All bushes are marked with size and bore.
All bushes are supplied with the appropriate sockets screws. Socket hexagon key supplied only when requested at a small extra charge.

Standard metric and imperial bores are listed in the tables above. All keyways are to BS4235 Part 1:1972 normal fit for metric bores and BS46 Part 1:1958 for imperial bores. (Keyways parallel).

Bushes marked * are supplied with a shallower depth keyway.
See Page 9 for tightening torques.
See Page 8 for installation and maintenance instructions.

Installation and Release Instructions for Taper Bushes

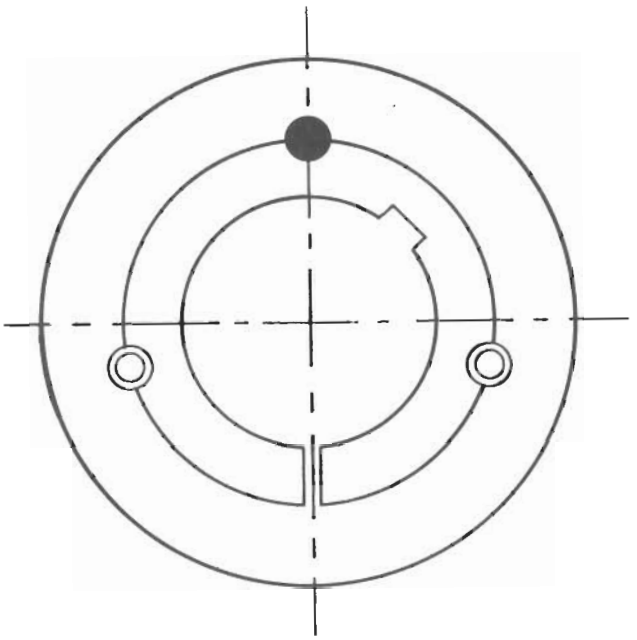

1008 to 3030 Bushes

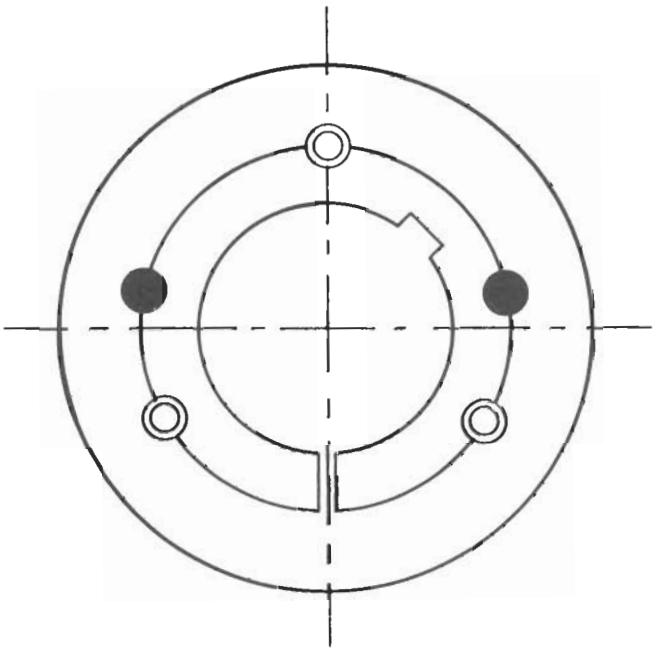

3535 to 5050 Bushes

Installation Instructions

1) Clean mating taper surfaces, bush bore and shaft ensuring that all surfaces are free from dirt and oil.
2) Insert bush into coupling flange ensuring that the threaded holes in the flange mate up with the plain holes in the bush. Threaded holes in the flange are marked in above diagrams.
3) Lightly oil threads and point of screws. Place the screws loosely into the threaded holes in the flange.
4) Place the key into the shaft keyway before fitting the coupling flange and bush onto the shaft. It is essential that the key is parallel and side fitting and **must have top clearance.**
5) Fit coupling flange and bush as one unit onto the shaft and locate in the position required. Remember that the bush will nip the shaft first and the flange will be slightly drawn onto the bush.
6) Using a standard hexagon wrench tighten the screws alternatively and gradually. The ideal tightening torques are shown on Page 9.
7) After coupling has been running under load for a short period, stop and check tightness of screws.
8) Fill empty holes and screw heads with grease to exclude dirt.

Release Instructions

1) Slacken off all screws alternatively and gradually.
2) Remove one or two screws according to the number of jacking off holes marked in above diagrams.
3) Insert appropriate number of screws in jacking off holes after oiling threads and points of screws.
4) Tighten screws alternatively until bush becomes loose of shaft and coupling flange
5) Remove assembly from the shaft.

Selection Examples for LEYFLEX Resilient Couplings

Information Required

(1) Application (2) Prime Mover (3) Power (4) Speed

(5) Shaft sizes including keyway details (6) Special features

Additional information if application is Brakedrum/Disc type

(7) Situation on application (8) Size of brake (9) Braking torque

(10) Number of stops and starts per hour

Example No. 1.

Long travel on a crane electric motor non reversing to transmit 75 KW at 1100 R.P.M. Shaft sizes 50mm and 70mm standard parallel keys

Duty Factor 2.0 to 1 Prime Mover Factor 1 to 1

$$\text{Duty at 100 R.P.M.} = \frac{75 \times 100 \times 2 \times 1}{1100} \quad 13.63 \text{ KW at 100 R.P.M.}$$

Coupling selection for power size LXL65/16 pins. P.B type
Coupling selection for shafts size LXL65/16 pins P.B. type

Coupling selection for power size LXL185/9 pins T.B. type
Coupling selection for shafts size LXL220/6 pins T.B. type

Example No. 2

Main hoist on a crane electric motor reversing
Brakedrum 400 dia. × 185 wide number of stops starts per hour 400 to transmit 120 KW at 960 R.P.M. Shaft sizes 70mm and 90mm standard taper keys braking torque 13,500 lb ins

Method 1 Motor Selection = Motor KW × S.F. × D.F.

Motor KW = 120 S.F. = 2.5 D.F. = 2.5

$$\text{Motor KW at 100 R.P.M.} = \frac{\text{Motor KW} \times \text{S.F.} \times \text{D.F.} \times 100}{\text{R.P.M.}}$$

$$= \frac{120 \times 2.5 \times 2.5 \times 100}{960} = 78.125 \text{ KW}$$

Method 2 Brake Selection = Brake KW × S.F. × 2

$$\text{Torque} = 13{,}500 \text{ lb ins} \quad \text{KW} = \frac{\text{Torque} \times \text{R.P.M.} \times 0.746}{63{,}000} = \frac{13.500 \times 960 \times 0.746}{63{,}000}$$

$$= 153.46 \text{ KW}$$

$$\text{Brake KW at 100 R.P.M.} = \frac{\text{Brake KW} \times \text{S.F.} \times 2 \times 100}{\text{R.P.M.}} = \frac{153.46 \times 2.5 \times 2 \times 100}{960}$$

$$= 79.92 \text{ KW}$$

Select coupling on highest power size LXL100BM/16 pins complete with 400 dia. × 185 wide brakedrum

See Pages 5, 6 and 7 for power ratings.

See Pages 2, 3, 4 and 10 for dimension tables.

See Page 11 for non stock standard brakedrum variations.

See Page 1 for selection details.

See Page 1 for factors.

USEFUL CONVERSIONS

1 Kilogram = 2.205 lbs = 9.8066 Newtons

1 Metre = 39.37 ins = 3.28 ft

1 Kilogram Metre = 86.8 lb ins = 7.233 lb ft

1 Newton Metre = 0.1019 kgm = 0.73756 lb ft = 8.8507 lb ins

$$\text{Torque} = \frac{\text{HP} \times 63000}{\text{R.P.M.}} \text{ lb ins} = \frac{\text{KW} \times 63000 \times 1.34}{\text{R.P.M.}} \text{ lb ins}$$

$$= \frac{\text{HP} \times 7118}{\text{R.P.M.}} \text{ NM} = \frac{\text{KW} \times 7118 \times 1.34}{\text{R.P.M.}} \text{ NW}$$

1 kgm^2 = 23.704 lb ft^2 = 3417.17 lb in^2

1 lb in^2 = 0.00029264 kgm^2

$GD^2 = 4 \times WR2$

$C° = {}^5/_9 \times (F° - 32)$

$F° = ({}^9/_5 \times C°) + 32$

NQA
ISO 9001
REGISTERED COMPANY
CERT NO 0088
UKAS QUALITY MANAGEMENT
O15

QUALITY POLICY

The company's quality policy is:-

To ensure that its products and services have the appropriate level of specification and durability to fully meet their specified requirements and customer expectations, to be delivered on time and give maximum product value to the customer.

To pursue improvements in processing equipment, procedures and product so as to develop the service to cater for the changing demands of customer requirements.

To develop the philosophy that non-conformance to specification is unacceptable and that conformance is achieved by planned and controlled activities.

To conform to the requirements of BS/EN/ISO9001.

To place particular importance on the contribution that all employees make to quality and to work with them to provide the necessary information, training and support to enable them to achieve the required levels of competence.

Leyden Transmissions Limited

Roberttown Ironworks, Roberttown, Liversedge, West Yorkshire WF15 7LQ

Telephone: 01924 411048 Fax: 01924 411350

Email: info@leyden-ptc.co.uk

A wholly owned subsidiary of A&J Fabrications.

LXL4003/2003